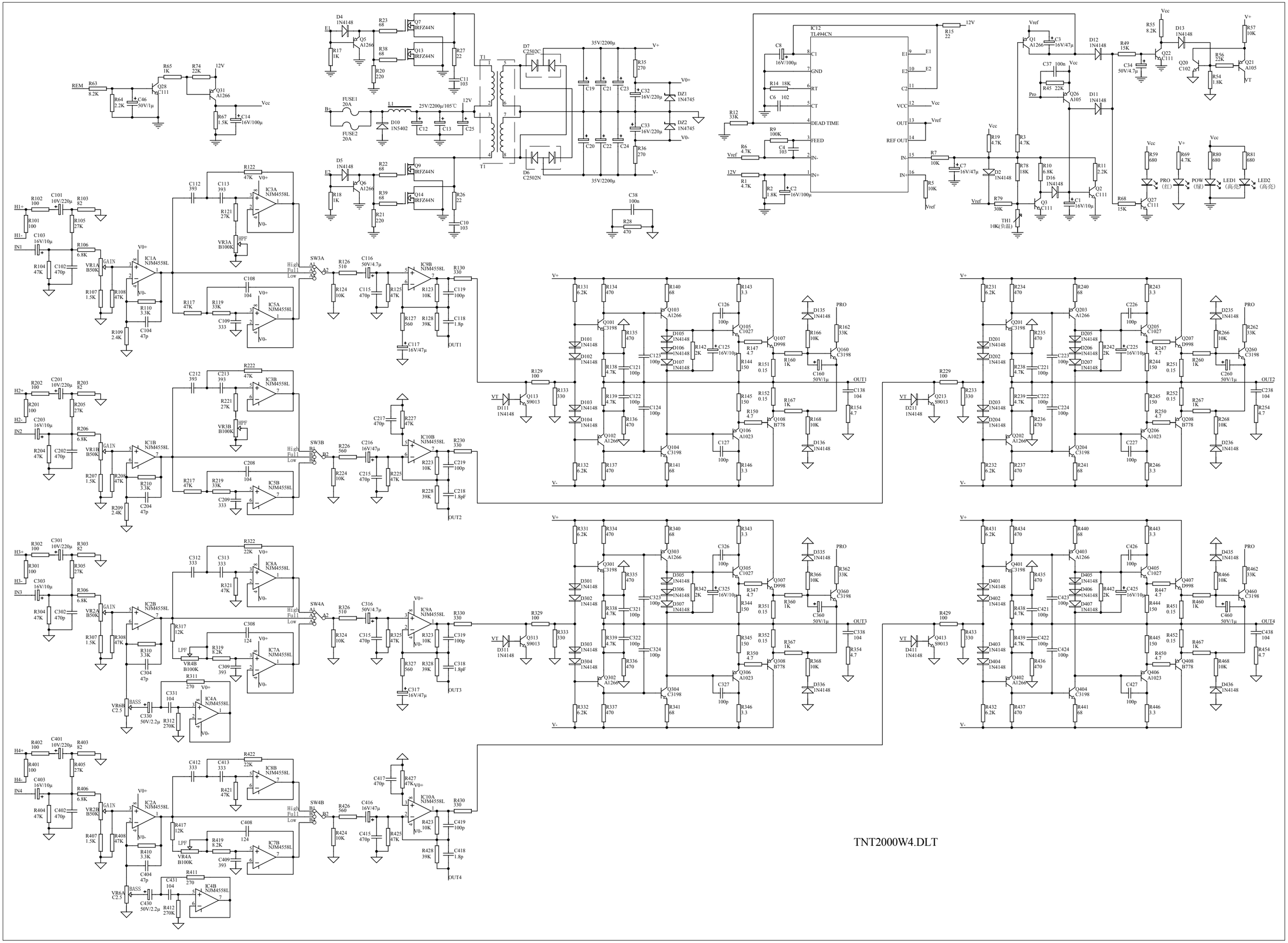
TNT2000W4.DLT
IC12 TL494CN
IC1A NJM4558L
IC1B NJM4558L
IC2A NJM4558L
IC2B NJM4558L
IC3A NJM4558L
IC3B NJM4558L
IC4A NJM4558L
IC4B NJM4558L
IC5A NJM4558L
IC5B NJM4558L
IC7A NJM4558L
IC7B NJM4558L
IC8A NJM4558L
IC8B NJM4558L
IC9A NJM4558L
IC9B NJM4558L
IC10A NJM4558L
IC10B NJM4558L
SW3A
SW3B
SW4A
SW4B
High
Full
Low
OUT1
OUT2
OUT3
OUT4
PRO
PRO (红)
POW (绿)
LED1 (高亮)
LED2 (高亮)
TH1 10K(负温)
35V/2200μ
25V/2200μ/105℃
FUSE1 20A
FUSE2 20A